EF

EF – VENTILATION GRILLE

INSTALLATION SUBFRAME FOR THE FITTING OF FILTER MEDIA, FOR THE FAST AND SIMPLE INSTALLATION OF VENTILATION GRILLES WITH FILTERING FUNCTION

Installation subframe for the simple and precise installation of ventilation grilles, can be mortared into the wall opening with fixing tabs

- Suitable for ventilation grilles of Types AT, VAT, AH, SL, TR, TRS
- Angle sections made of galvanised steel
- Preformed fixing tabs
- Filter medium is kept in place by wires

Application

Application

- For the installation of ventilation grilles in walls and sills
- Simplified installation
- The installation subframe allows for the fast, simple and precise installation of ventilation grilles
- For the protection of components in systems with heavily dust laden extract air
- Coarse dust filter according to EN 779, class G4
- For ventilation grilles without any attachments and for ventilation grilles with hit and miss damper (attachment)

Description

Parts and characteristics

- Installation subframe consisting of angle sections
- Groove for spring clip fixing of the grille face
- Support wires
- Filter medium FMP-G4-C11

Materials and surfaces

- Installation subframes, made of formed sheet steel, with fixing tabs
- Filter medium made of chemical fibres
- Installation subframe dip coated RAL 9005, jet black

Standards and guidelines

- Testing of coarse and fine dust filters to EN 779 (Particulate air filters for general ventilation): European standard for the test procedure and the test rig for the determination of filter performance

Maintenance

- Maintenance-free as construction and materials are not subject to wear
- Inspection and cleaning to VDI 6022

TECHNICAL INFORMATION

Variants

Any accessories are defined with the order code of the ventilation grille.

Installation subframe and casing for the fitting of filter media for ventilation grilles

Type of ventilation grille	Installation subframe
	EF
Type of ventilation grille	Width of ventilation grille border
	mm
Installation into walls, sills or rectangular ducts	
AT	27
VAT	27
AH	28
SL	28
TR	27
TRS	27

The weight table shows the available nominal sizes

Installation details

Installation and commissioning

Before mortaring in the installation subframe

- Bend the preformed fixing tabs

After mortaring in the installation subframe

- Position the ventilation grille in the installation subframe and fasten it
- EF-AS: Before you install a ventilation grille with a hit and miss damper you need to remove the support wires

These are only schematic diagrams to illustrate installation details.

Installation dimensions of installation subframe with filter element (EF)

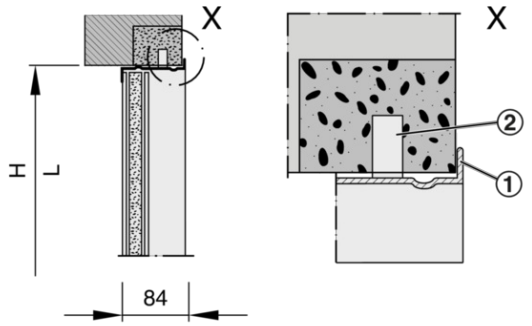

① Installation subframe
② Fixing tab

Ventilation grille with spring clip fixing

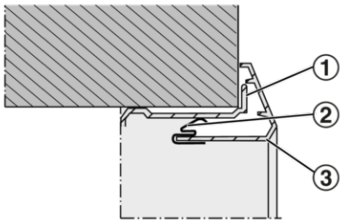

① Installation subframe
② Spring clip
③ Ventilation grille